SECTION LU

ENGINE LUBRICATION SYSTEM

CONTENTS

PRECAUTIONS **2**
Precautions for Liquid Gasket 2
LIQUID GASKET APPLICATION PROCEDURE 2
PREPARATION **3**
Special Service Tools 3
Commercial Service Tools 3
LUBRICATION SYSTEM **4**
Lubrication Circuit 4
System Chart 5
ENGINE OIL **6**
Inspection 6
ENGINE OIL LEVEL 6
ENGINE OIL APPEARANCE 6
ENGINE OIL LEAKAGE 6
OIL PRESSURE CHECK 6
Changing Engine Oil 7
OIL FILTER **9**
Removal and Installation 9
REMOVAL 9
INSTALLATION 9
INSPECTION AFTER INSTALLATION 9
OIL COOLER **10**
Removal and Installation 10
REMOVAL 10
INSPECTION AFTER REMOVAL 10
INSTALLATION 10
INSPECTION AFTER INSTALLATION 10
OIL PUMP **12**
Removal and Installation 12
REMOVAL 12
INSTALLATION 12
INSPECTION AFTER INSTALLATION 12
Disassembly and Assembly 12
DISASSEMBLY 12
INSPECTION AFTER DISASSEMBLY 13
ASSEMBLY 14
SERVICE DATA AND SPECIFICATIONS (SDS) **15**
Standard and Limit 15
OIL PRESSURE 15
ENGINE OIL CAPACITY (APPROXIMATE) 15
OIL PUMP 15
REGULATOR VALVE 15

PRECAUTIONS

PFP:00001

Precautions for Liquid Gasket

ABS00CJR

LIQUID GASKET APPLICATION PROCEDURE

1. Remove old liquid gasket adhering to the liquid gasket application surface and the mating surface.
   - Remove liquid gasket completely from the liquid gasket application surface, mounting bolts, and bolt holes.
2. Wipe the liquid gasket application surface and the mating surface with white gasoline (lighting and heating use) to remove adhering moisture, grease and foreign materials.
3. Attach liquid gasket tube to the tube presser [SST: WS39930000 (—)].
   Use Genuine RTV Silicone Sealant or equivalent. Refer to GI-48, "RECOMMENDED CHEMICAL PRODUCTS AND SEALANTS" .
   - Within 5 minutes of liquid gasket application, install the mating component.
   - If liquid gasket protrudes, wipe it off immediately.
   - Do not retighten mounting bolts or nuts after the installation.
   - Wait 30 minutes or more after installation before refilling engine oil and engine coolant.

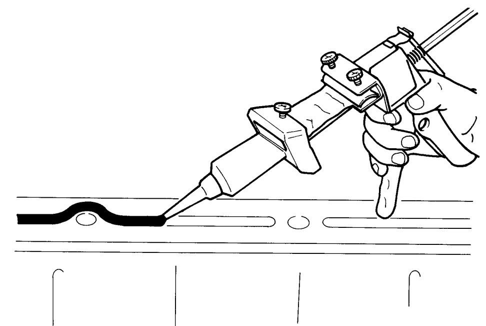

EMA0622D

PREPARATION

PFP:00002

Special Service Tools

ABS00CJS

The actual shapes of Kent-Moore tools may differ from those of special service tools illustrated here.

Tool number (Kent-Moore No.) Tool name		Description
ST25051001 (J25695-1) Oil pressure gauge	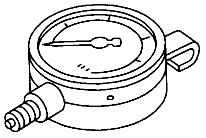 NT050	Measuring oil pressure **Maximum measuring range:** **2,452 kPa (25 kg/cm^2 , 356 psi)**
ST25052000 (J25695-2) Hose	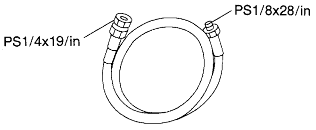 S-NT559	Adapting oil pressure gauge to oil pan (upper)
KV10115801 (J-38956) Oil filter wrench	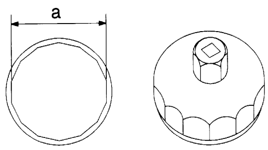 S-NT375	Removing and installing oil filter **a: 64.3 mm (2.531 in)**
WS39930000 (—) Tube presser	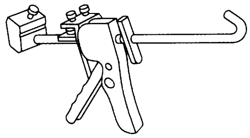 NT052	Pressing the tube of liquid gasket

Commercial Service Tools

ABS00CJT

Tool name		Description
Deep socket	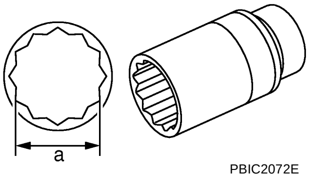 PBIC2072E	Removing and installing oil pressure switch **a: 27 mm (1.06 in)**

LUBRICATION SYSTEM

PFP:15010

Lubrication Circuit

ABS00CJU

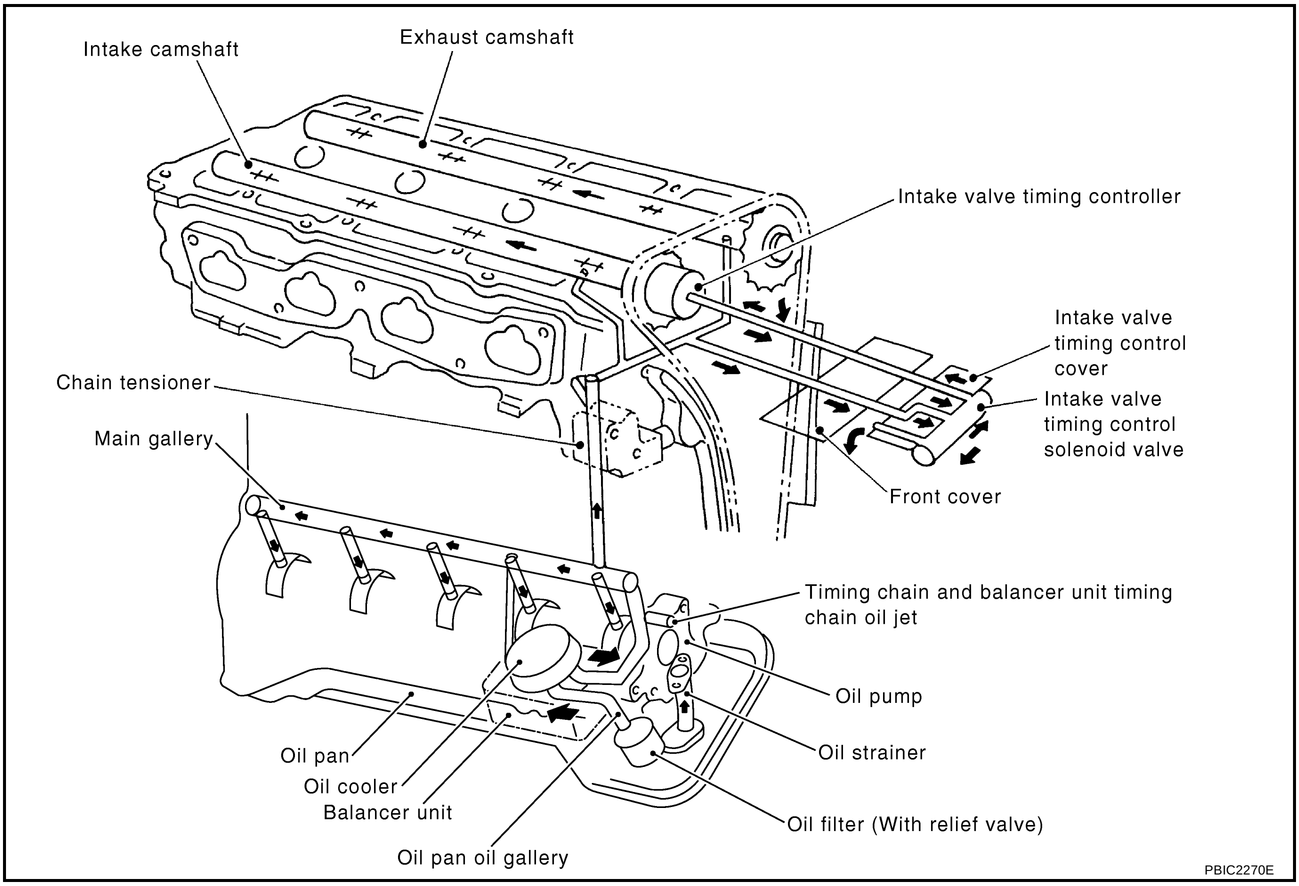

System Chart

ABS00CJV

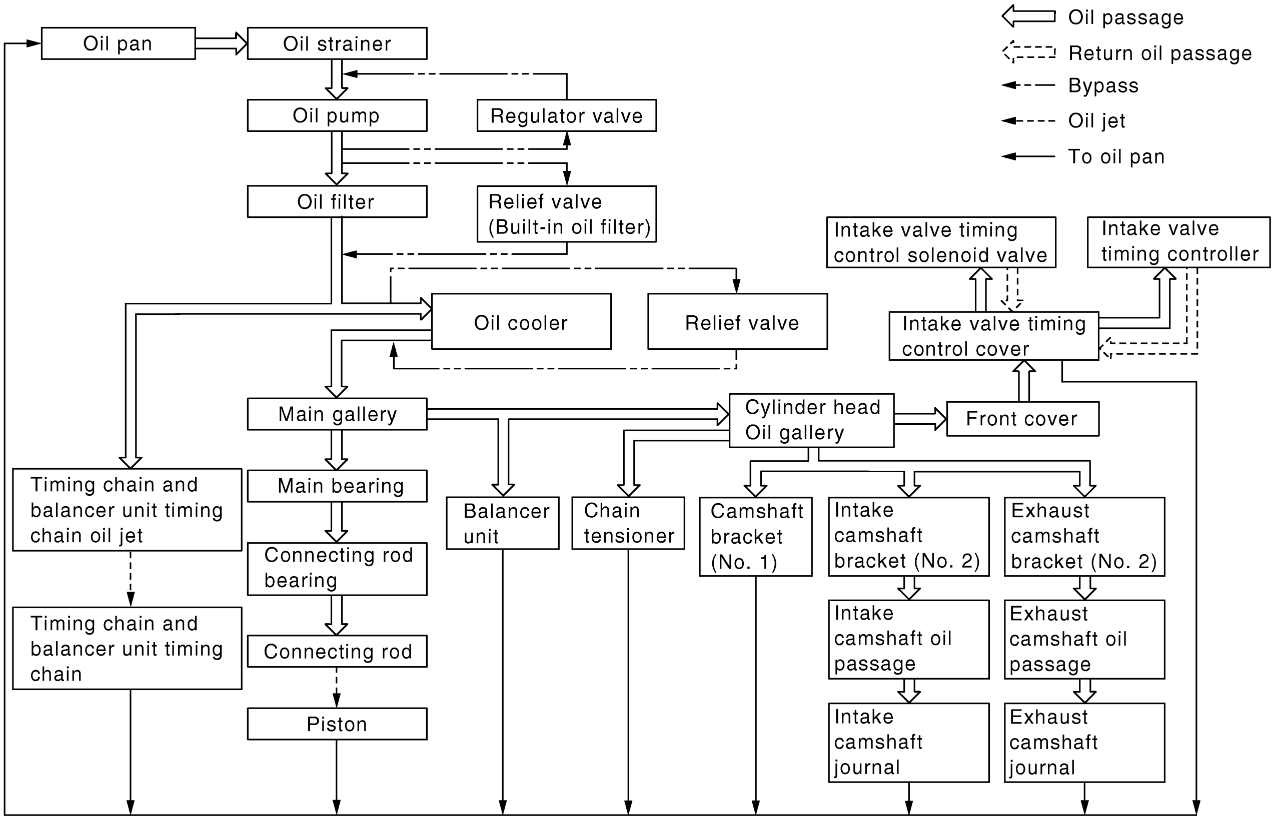

PBIC2753E

ENGINE OIL

PFP:KLA92

Inspection

ABS00CJW

ENGINE OIL LEVEL

NOTE:
Before starting the engine, put the vehicle horizontally and check the engine oil level. If the engine is already started, stop it and allow 10 minutes before checking.

1. Pull out oil level gauge and wipe it clean.
2. Insert oil level gauge and make sure the engine oil level is within the range shown in the figure.
3. If it is out of range, adjust it.

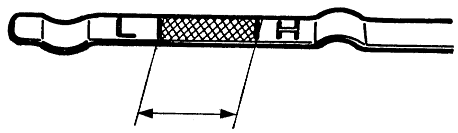

PBIC0249E

ENGINE OIL APPEARANCE

- Check engine oil for white turbidity or heavy contamination.
- If engine oil becomes turbid and white, it is highly probable that it is contaminated with engine coolant. Repair or replace damaged parts.

ENGINE OIL LEAKAGE

Check for engine oil leakage around the following area.

- Oil pans (lower and upper)
- Oil pan drain plug
- Oil pressure switch
- Oil filter
- Oil cooler
- Intake valve timing control cover and intake valve timing control solenoid valve
- Front cover
- Mating surface between cylinder block and lower cylinder block
- Mating surface between cylinder block and cylinder head
- Mating surface between cylinder head and rocker cover
- Crankshaft oil seals (front and rear)

OIL PRESSURE CHECK

WARNING:

- **Be careful not to burn yourself, as engine oil may be hot.**
- **Engine oil pressure check should be in “ Parking position” (A/T models) or “Neutral position” (M/T models), and should apply parking brake securely.**

1. Check the engine oil level. Refer to LU-6, "ENGINE OIL LEVEL" .
2. Remove RH undercover.

3. Disconnect harness connector at oil pressure switch, and remove oil pressure switch using a deep socket (commercial service tool).

   CAUTION:
   Do not drop or shock oil pressure switch.

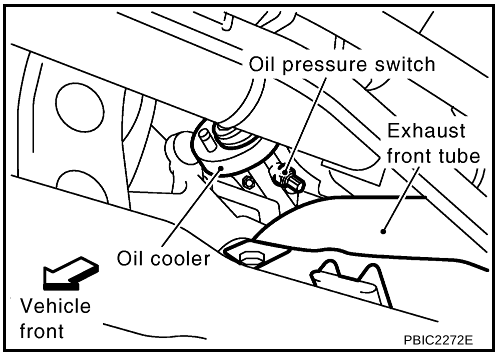

4. Install the oil pressure gauge and the hose [SST].

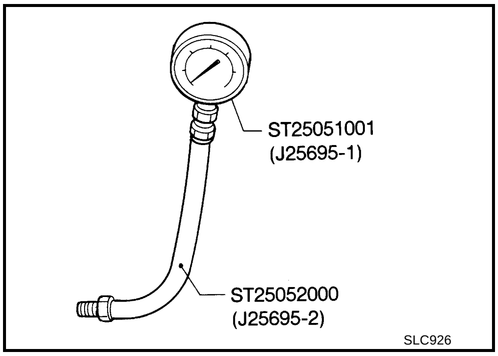

5. Start the engine and warm it up to normal operating temperature.
6. Check oil pressure with the engine running under no-load.

   NOTE:
   When engine oil temperature is low, engine oil pressure becomes high.

Engine oil pressure [Engine oil temperature at 80°C (176°F)]

Engine speed rpm	Approximate discharge pressure kPa (kg/cm^2 , psi)
Idle speed	More than 98 (1.0, 14)
2,000	More than 294 (3.0, 43)

If difference is extreme, check for oil leakage in oil passages and oil pump malfunction.

7. After the inspections, install oil pressure switch as follows:

a. Remove old liquid gasket adhering to oil pressure switch and the engine.
b. Apply liquid gasket and tighten oil pressure switch to the specification.
   Use Genuine RTV Silicone Sealant or equivalent. Refer to GI-48, "RECOMMENDED CHEMICAL PRODUCTS AND SEALANTS" .

   : 14.8 N·m (1.5 kg-m, 11 ft-lb)

c. After warming up the engine, make sure there is no leaks of engine oil with running the engine.

Changing Engine Oil

ABS00CJX

WARNING:

- **Be careful not to burn yourself, as engine oil may be hot.**
- **Prolonged and repeated contact with used engine oil may cause skin cancer; try to avoid direct skin contact with used engine oil. If skin contact is made, wash thoroughly with soap or hand cleaner as soon as possible.**

1. Warm up the engine, put the vehicle horizontally and check for oil leakage from the engine components. Refer to LU-6, "ENGINE OIL LEAKAGE" .
2. Stop the engine and wait for 10 minutes.

3. Loosen oil filler cap and then remove drain plug.
4. Drain engine oil.
5. Install drain plug with new washer. Refer to EM-22, "OIL PAN AND OIL STRAINER" .

   CAUTION:
   Be sure to clean drain plug and install with new washer.

   Oil pan drain plug:

   : 34.3 N·m (3.5 kg-m, 25 ft-lb)

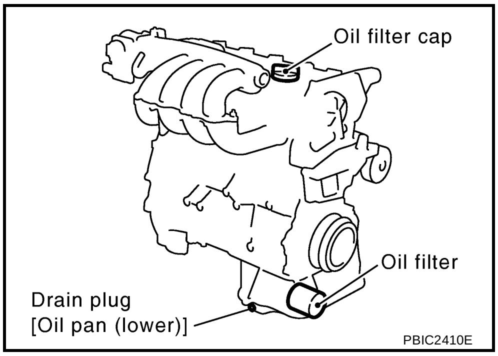

6. Refill with new engine oil.
   Engine oil specification and viscosity:
   Refer to MA-10, "RECOMMENDED FLUIDS AND LUBRICANTS" .

   Engine oil capacity (Approximate):

Unit: ℓ (US qt, Imp qt)

Drain and refill	With oil filter change	3.9 (4-1/8, 3-3/8)
	Without oil filter change	3.5 (3-3/4, 3-1/8)
Dry engine (Overhaul)		4.5 (4-3/4, 4)

CAUTION:
- **The refill capacity depends on the engine oil temperature and drain time. Use these specifications for reference only.**
- **Always use oil level gauge to determine the proper amount of engine oil in the engine.**

7. Warm up the engine and check area around drain plug and oil filter for oil leakage.
8. Stop the engine and wait for 10 minutes.
9. Check the engine oil level. Refer to LU-6, "ENGINE OIL LEVEL" .

OIL FILTER

PFP:15208

Removal and Installation

ABS00CJY

REMOVAL

1. Open oil filter installation/removal cover on RH undercover.
2. Using the oil filter wrench [SST], remove oil filter.

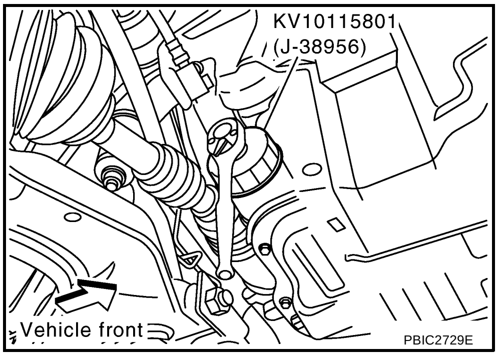

WARNING:
Be careful not to get burned when the engine and engine oil may be hot.

CAUTION:
- **Oil filter is provided with relief valve. Use Genuine Nissan Oil Filter or equivalent.**
- **When removing, prepare a shop cloth to absorb any engine oil leakage or spillage.**
- **Do not allow engine oil to adhere to drive belt.**
- **Completely wipe off any engine oil that adheres to the engine and the vehicle.**

INSTALLATION

1. Remove foreign materials adhering to the oil filter installation surface.
2. Apply new engine oil to the oil seal contact surface of new oil filter.

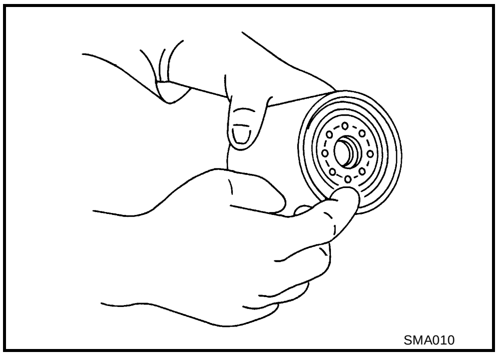

3. Screw oil filter manually until it touches the installation surface, then tighten it by 2/3 turn. Or tighten to the specification.

Oil filter:

: 17.6 N·m (1.8 kg-m, 13 ft-lb)

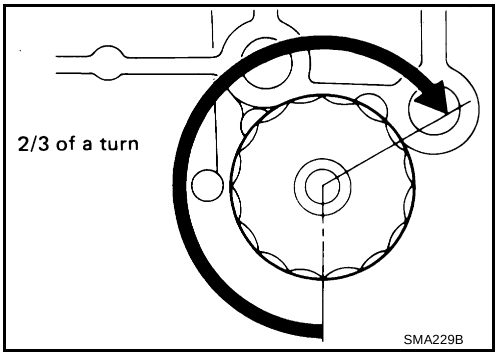

INSPECTION AFTER INSTALLATION

1. Check the engine oil level. Refer to LU-6, "ENGINE OIL" .
2. Start the engine, and check there is no leaks of engine oil.
3. Stop the engine and wait for 10 minutes.
4. Check the engine oil level, and adjust the level. Refer to LU-6, "ENGINE OIL" .

OIL COOLER

PFP:21305

Removal and Installation

ABS00CJZ

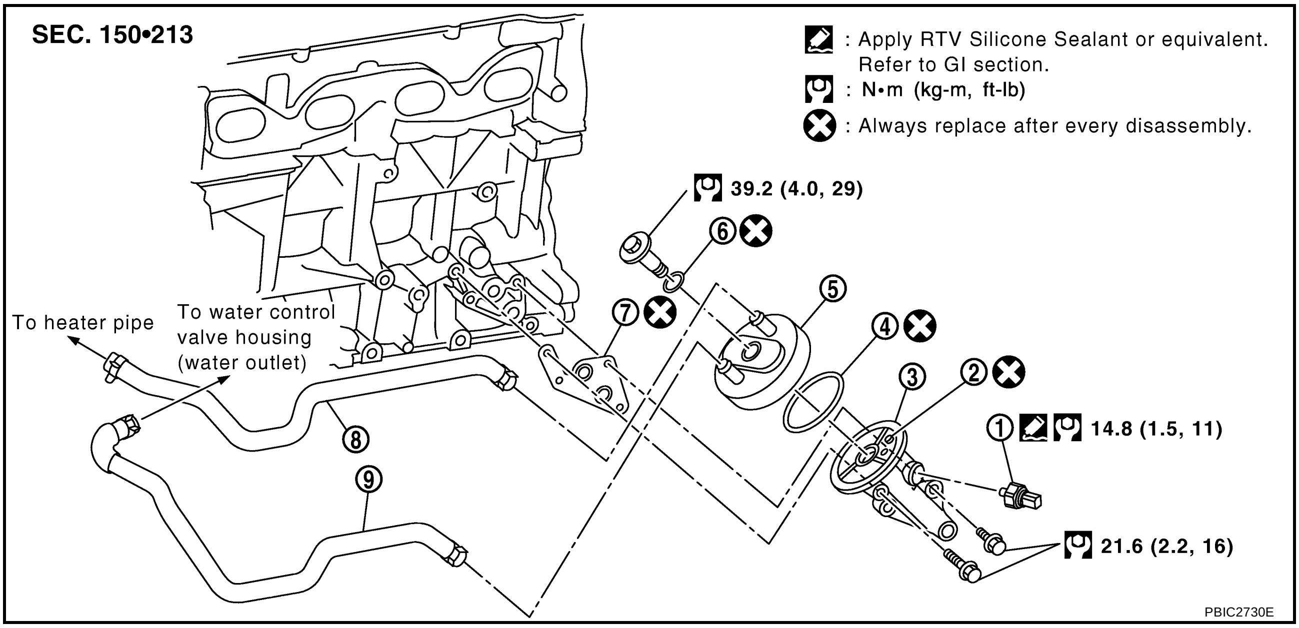

1.	Oil pressure switch	2.	Relief valve	3.	Oil cooler bracket
4.	O-ring	5.	Oil cooler	6.	O-ring
7.	Gasket	8.	Water hose	9.	Water hose

WARNING:

Be careful not to get burned when engine coolant and engine oil may be hot.

CAUTION:

- **When removing oil cooler and oil cooler bracket, prepare a shop cloth to absorb any engine oil leakage or spillage.**
- **Completely wipe off any engine oil that adhere to the engine and the vehicle.**

REMOVAL

1. Remove RH front road wheel and tire and RH undercover.
2. Drain engine coolant from radiator drain plug at the bottom of radiator and from water drain plug on cylinder block. Refer to CO-8, "Changing Engine Coolant" and EM-82, "CYLINDER BLOCK" .
3. Disconnect water hoses from oil cooler.
4. Remove oil cooler and oil cooler bracket.

   NOTE:

   For reference when installing, put a mating mark on oil cooler and oil cooler bracket.

INSPECTION AFTER REMOVAL

Oil Cooler

- Check oil cooler for cracks.
- Check oil cooler for clogging by blowing through engine coolant inlet.

If necessary, replace oil cooler assembly.

Relief Valve

Inspect relief valve for movement, cracks and breaks by pushing the ball. If replacement is necessary, remove valve by prying it out with a suitable tool. Install the new valve in place by tapping it.

INSTALLATION

Install in the reverse order of removal.

INSPECTION AFTER INSTALLATION

1. Check the engine oil level and the engine coolant level, and adjust the levels. Refer to LU-6, "ENGINE OIL" and CO-8, "ENGINE COOLANT" .

2. Start the engine, and make sure there is no leaks of engine oil or engine coolant.
3. Stop the engine and wait for 10 minutes.
4. Check the engine oil level and the engine coolant level again. Refer to LU-6, "ENGINE OIL" and CO-8, "ENGINE COOLANT" .

OIL PUMP

PFP:15010

Removal and Installation

ABS00CK0

REMOVAL

Remove front cover. Refer to EM-49, "TIMING CHAIN" .

NOTE:
Oil pump is built into front cover.

INSTALLATION

Note the following, and install in the reverse order of removal.

- When installing, align crankshaft flat faces with inner rotor flat faces.

INSPECTION AFTER INSTALLATION

1. Check the engine oil level. Refer to LU-6, "ENGINE OIL" .
2. Start the engine, and check there is no leaks of engine oil.
3. Stop the engine and wait for 10 minutes.
4. Check the engine oil level and adjust engine oil. Refer to LU-6, "ENGINE OIL" .

Disassembly and Assembly

ABS00CK1

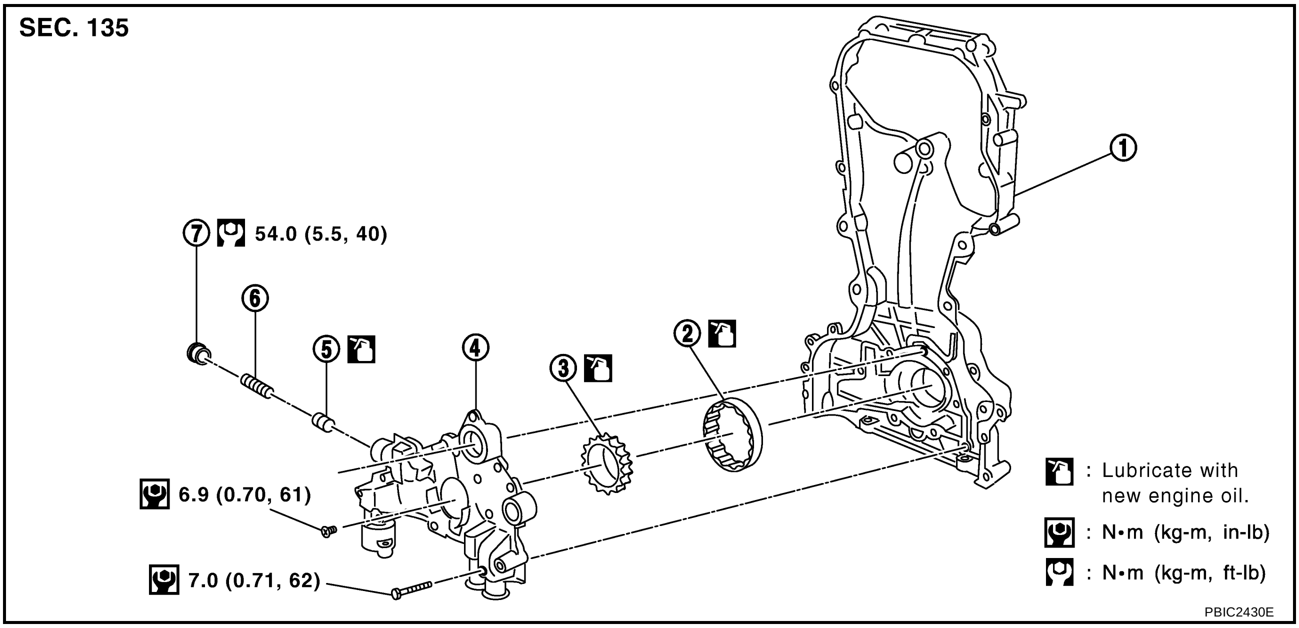

1. Front cover (Oil pump body is united)
2. Outer rotor
3. Inner rotor
4. Oil pump cover
5. Regulator valve
6. Regulator valve spring
7. Regulator valve plug

DISASSEMBLY

1. Remove oil pump cover.
2. Remove inner rotor and outer rotor from front cover.
3. After removing regulator valve plug, remove regulator valve spring and regulator valve.

INSPECTION AFTER DISASSEMBLY

Clearance of Oil Pump Parts

- Measure the clearance with a feeler gauge.
  - Clearance between outer rotor and front cover (position 1)

    Standard : 0.114 - 0.179 mm (0.0045 - 0.0070 in)
  - If out of the standard, replace oil pump assembly.
  - Tip clearance between inner rotor and outer rotor (position 2)

    Standard : Below 0.220 mm (0.0087 in)
  - If out of the standard, replace inner rotor and outer rotor.

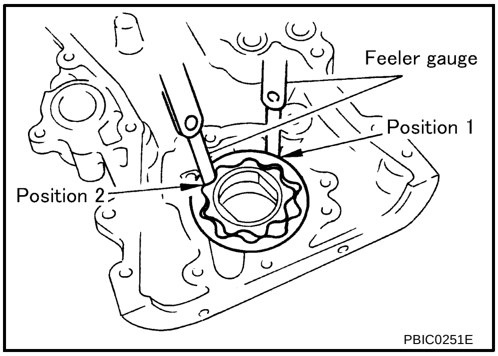

- Measure the clearance with a feeler gauge and a straightedge.
  - Side clearance between inner rotor and front cover (position 3)

    Standard : 0.030 - 0.070 mm (0.0012 - 0.0028 in)
  - If out of the standard, replace oil pump assembly.
  - Side clearance between outer rotor and front cover (position 4)

    Standard : 0.060 - 0.110 mm (0.0024 - 0.0043 in)
  - If out of the standard, replace oil pump assembly.

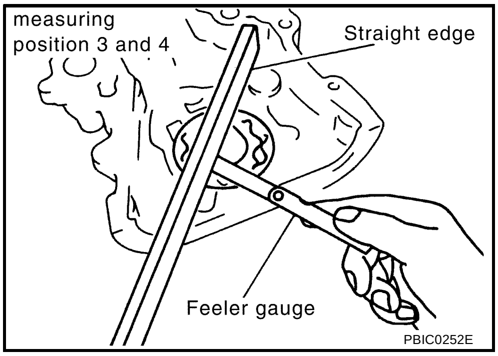

- Calculate the clearance between inner rotor and front cover with the following procedure:
  - Measure the outer diameter of protruded portion of inner rotor with a micrometer. (position 5)

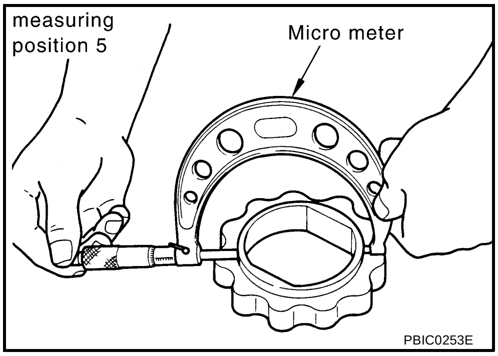

  - Measure the inner diameter of front cover with an inside micrometer. (position 6)

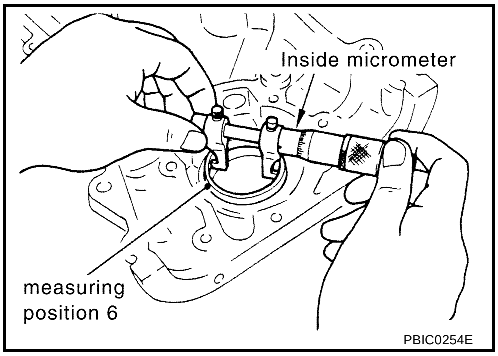

  - (Clearance) = (Inner diameter of front cover) – (Outer diameter of inner rotor)

    Standard : 0.035 - 0.070 mm (0.0014 - 0.0028 in)
  - If out of the standard, replace oil pump assembly.

Regulator Valve Clearance

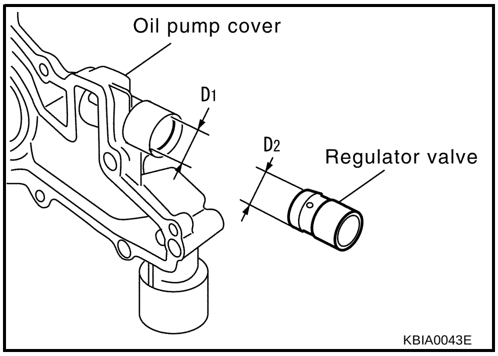

(Clearance) = (Valve hole diameter “D1”) – (Regulator valve outer diameter “D2”)

Standard : 0.040 - 0.097 mm (0.0016 - 0.0038 in)

- If out of the standard, replace oil pump assembly.

CAUTION:

- **Coat regulator valve with new engine oil.**
- **Make sure that it falls smoothly into valve hole by its own weight.**

ASSEMBLY

Note the following, and assemble in the reverse order of disassembly.

- Install inner rotor and outer rotor with the punched marks on the oil pump cover side.

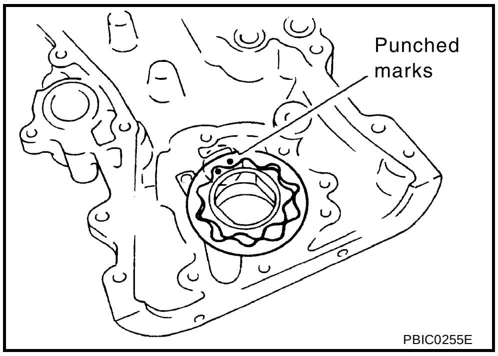

A

LU

C

D

E

F

G

H

I

J

K

L

M

SERVICE DATA AND SPECIFICATIONS (SDS)

PFP:00030

Standard and Limit

ABS00CK2

OIL PRESSURE

Engine speed rpm	Approximate discharge pressure* kPa (kg/cm^2 , psi)
Idle speed	More than 98 (1.0, 14)
2,000	More than 294 (3.0, 43)

*: Engine oil temperature at 80° (176°F)

ENGINE OIL CAPACITY (APPROXIMATE)

Unit: ℓ (US qt, Imp qt)

Drain and refill	With oil filter change	3.9 (4-1/8, 3-3/8)
	Without oil filter change	3.5 (3-3/4, 3-1/8)
Dry engine (Overhaul)		4.5 (4-3/4, 4)

OIL PUMP

Unit: mm (in)

Front cover to outer rotor radial clearance	0.114 - 0.179 (0.0045 - 0.0070)
Inner rotor to outer rotor tip clearance	Below 0.220 (0.0087)
Front cover to inner rotor side clearance	0.030 - 0.070 (0.0012 - 0.0028)
Front cover to outer rotor side clearance	0.060 - 0.110 (0.0024 - 0.0043)
Inner rotor to front cover clearance	0.035 - 0.070 (0.0014 - 0.0028)

REGULATOR VALVE

Unit: mm (in)

Regulator valve to valve hole clearance	0.040 - 0.097 (0.0016 - 0.0038)